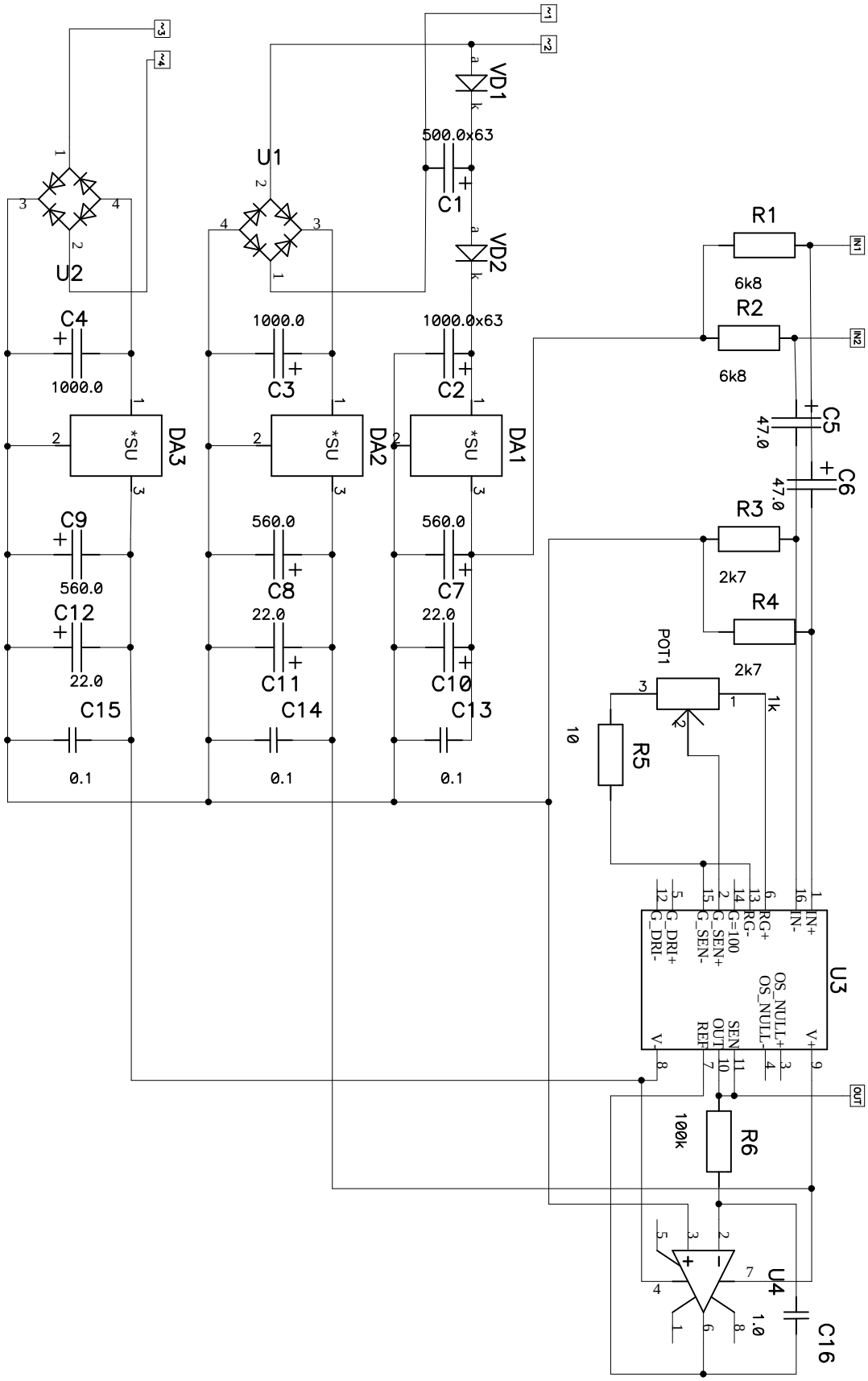
~1
~2
~3
~4
VD1
VD2
500.0x63
C1
U1
U2
R1
6k8
R2
6k8
IN1
IN2
C5
47.0
C6
47.0
R3
2k7
R4
2k7
POT1
1k
R5
10
C4
1000.0
C3
1000.0
C2
1000.0x63
DA3
DA2
DA1
*SU
C9
560.0
C8
560.0
C7
560.0
C12
22.0
C11
22.0
C10
22.0
C15
C14
C13
0.1
0.1
0.1
U3
IN+
IN-
RG+
RG-
G=100
G_SEN+
G_SEN-
G_DRI+
G_DRI-
OS_NULL+
OS_NULL-
SEN
OUT
REF
V+
V-
OUT
R6
100k
U4
1.0
C16

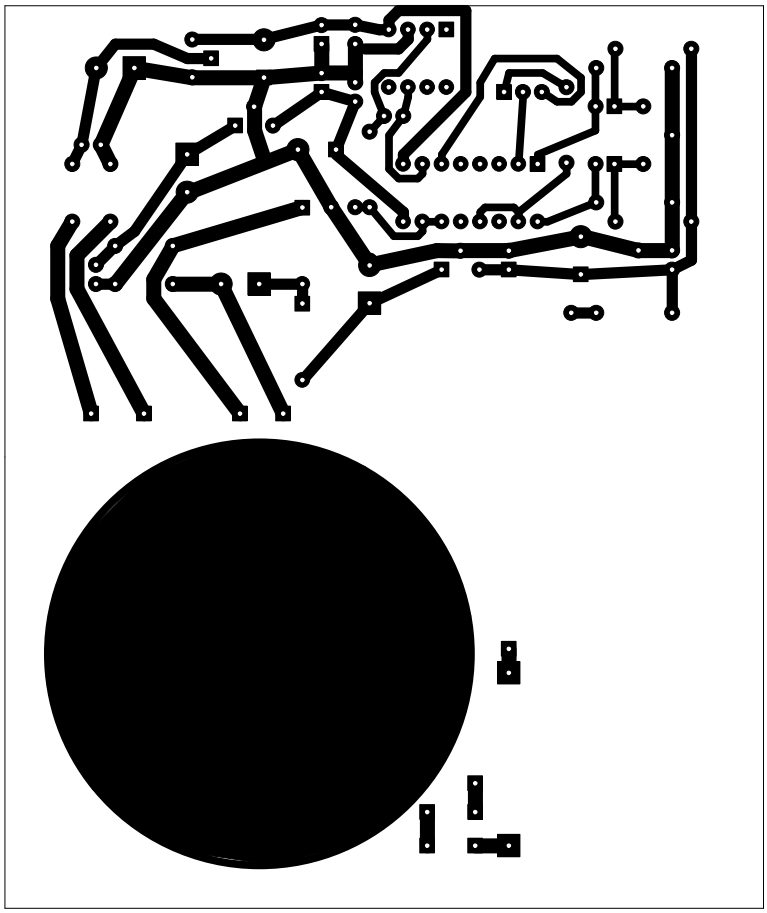

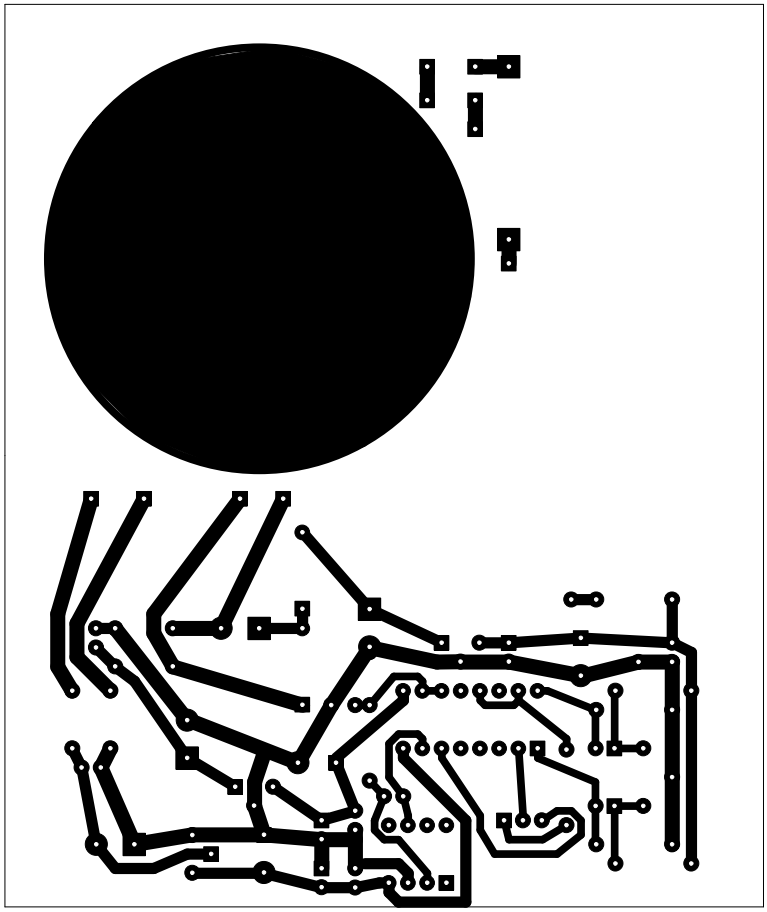

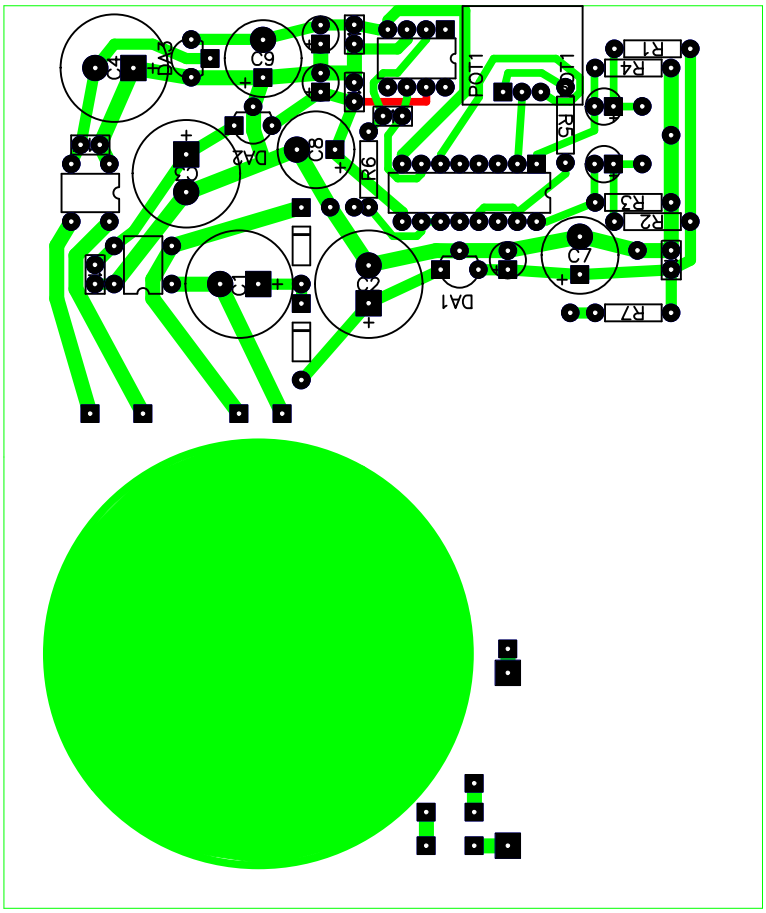
C4
DA3
C6
POT1
R1
R4
R5
C3
DA2
C8
R6
R3
R2
C7
C1
C2
DA1
R7