28BYJ-48 – 5V Stepper Motor

The 28BYJ-48 is a small stepper motor suitable for a large range of applications.

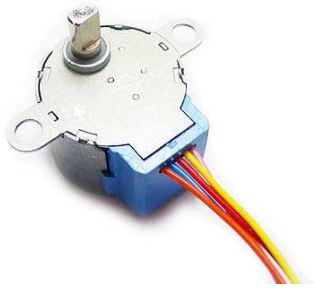

Rated voltage :	5VDC
Number of Phase	4
Speed Variation Ratio	1/64
Stride Angle	5.625°/64
Frequency	100Hz
DC resistance	50Ω±7%(25℃)
Idle In-traction Frequency	> 600Hz
Idle Out-traction Frequency	> 1000Hz
In-traction Torque	>34.3mN.m(120Hz)
Self-positioning Torque	>34.3mN.m
Friction torque	600-1200 gf.cm
Pull in torque	300 gf.cm
Insulated resistance	>10MΩ(500V)
Insulated electricity power	600VAC/1mA/1s
Insulation grade	A
Rise in Temperature	<40K(120Hz)
Noise	<35dB(120Hz,No load,10cm)
Model	28BYJ-48 – 5V

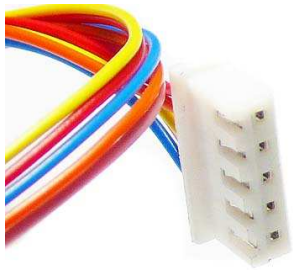

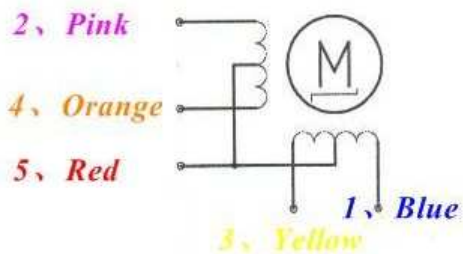

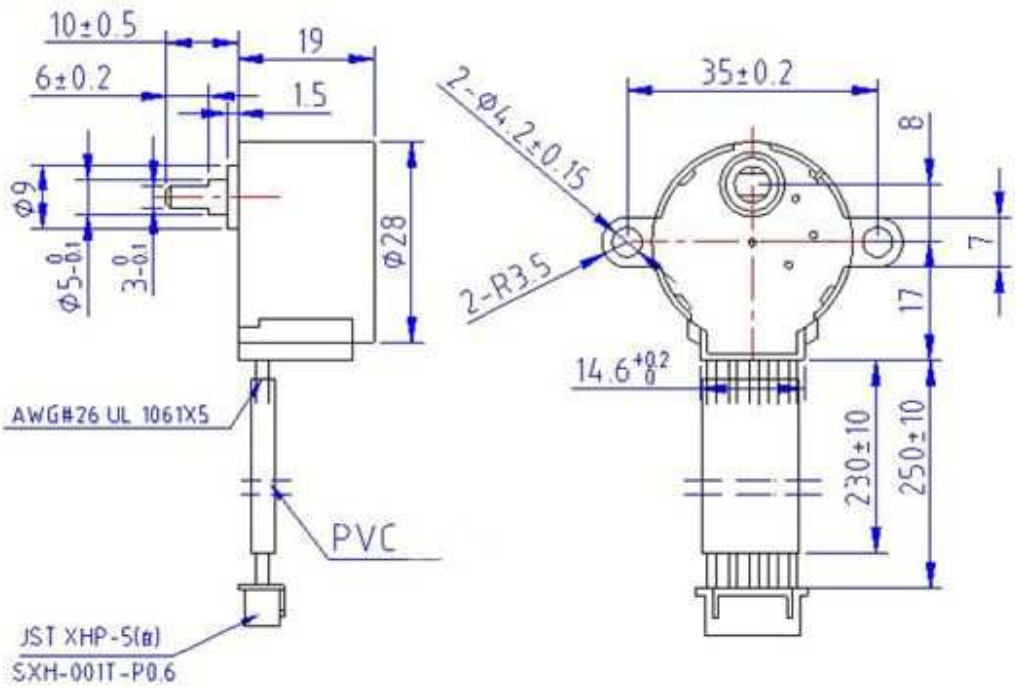

 Copyright © Welten Holdings Ltd - Specifications subject to change without further notice.